Uninterruptible Power Supply

UPS01

Milesight UPS01 is an advanced uninterruptible power supply (UPS) designed to ensure uninterrupted operation of various devices for up to 32 hours. Featuring IP67 and IK08 ratings, the UPS01 can withstand demanding environments and provide reliable protection against dust, water, and mechanical impact.

UPS01 makes it simple to prolong the working time of connected devices and supply with not only internal batteries but also an external power source through power adapter. Its plug-and-play design enables quick and easy integration with various devices such as gateways, routers, CPE, Dongle and sensing cameras, without the need for additional configuration. For added flexibility, the UPS01 offers M12 and Type-C connectors to suit different power supply scenarios.

What sets the UPS01 apart is its compatibility with Milesight network devices. This allows for real-time monitoring of power consumption and remote alarm notification to facilitate effective and smart management.

◆ Features

Robust and Distinctive Design

- Adopt rechargeable 12000mAh high-capacity battery for providing up to 32 hours' supplement
- Equip with heating film for protecting battery in low-temperature environment
- High IP67 and IK08 protection for adapting to harsh environment
- Equip with a traffic light indicator and cooperate with smart internal logic for status display

High Adaptability & Easy Configuration

- Compact size with multiple deployment methods for adapting to different scenarios
- Compatible with Milesight devices for managing both power monitoring and alarming remotely
- Provide dual versions of connectors for satisfying different output voltages and devices
- Support plug-and-play without further configuration
- Overcharging and overdischarging protection

◆ Specifications

Model	Type-C Version	M12 Version
Power		
Power Input	9~20V⎓ 2A	
Input Connector	DC Jack Female Connector	
Power Output	5V⎓ 4A	6~8.4V⎓ 1.5A
Output Connector	Type-C	4-Pin M12 A-Coded Female
Battery Capacity	4 x 3000mAh Lithium-ion Rechargeable Batteries	
Battery Supply Time[1]	6 ~ 32h	
Others		
LED Indicator	1×Traffic Light Indicator (Battery Capacity & Diagnose)	
Button	1×Reset Button (Internal)	
Software Features	Power Monitoring, Alarm, Upgrade (Only with Milesight Devices)	
Physical Characteristics		
Cable Length	DC IN: 30 cm Type-C: 100 cm	DC IN: 30 cm M12: 150 cm
Ingress Protection	IP67 & IK08	
Material & Color	Aluminum, White & Silver	
Dimension	96×60×45mm (3.78×2.36×1.77 in) (Without Cable)	
Operating Temperature	Charge Temperature: -20°C to +45°C (-4℉ to +113℉) Discharge Temperature: -20°C to +60°C (-4℉ to +140℉)	
Relative Humidity	0% - 95% (Non-condensing)	
Installation	Wall Mounting, DIN Rail Mounting, Pole Mounting, Desktop Mounting	

[1] The battery supply time is tested under laboratory and non-load conditions and for guideline purposes only. The actual power supply time of the UPS depends on the actual consumption of the connected device and its load.

◆ Dimensions(mm)

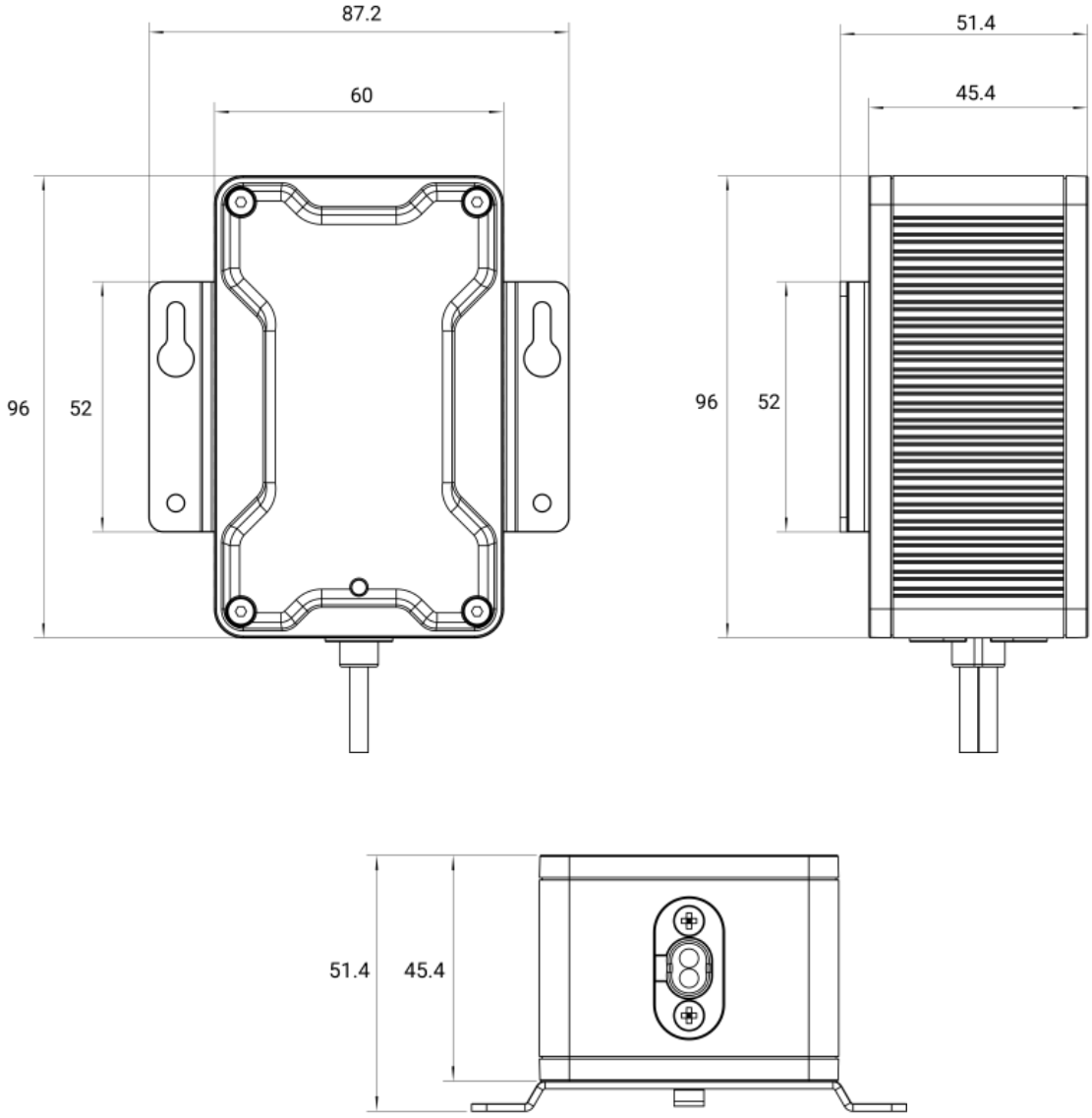

WELKO Av. Providencia 2330, Of. 63
+56 9 3174 3870 / +56 9 3427 0017
ventas@welko.cl - www.welko.cl