# Mini AI Thermopile People Counter

## Featuring LoRaWAN®

# VS351

VS351 is a compact AI thermopile people counter designed for indoor entrance and exit applications. It offers high accuracy in bi-directional people counting, enabling effective analysis of foot traffic and efficient space management. Combined with a radar sensor for presence detection, it intelligently schedules the activation time of the thermopile to optimize power consumption. As a Milesight D2D controller, the VS351 seamlessly communicates with other Milesight D2D devices, establishing more possible connections and paving the way for smoother operations.

With easy configuration and wireless detection, the VS351 facilitates simple deployment and connectivity. Compliant with the Milesight LoRaWAN® gateway and Milesight Development Platform solution, users can know the number of people in any indoor space and trigger other sensors or appliances easily via a webpage remotely.

VS351 can be used in meeting rooms, office buildings, etc.

**Battery Version**

**Type-C Version**

## ◆ Features

- Provide up to 95% detection accuracy (99% accuracy for single person passing) for bi-directional people counting with radar (battery version only) and the thermopile technology
- A Built-in temperature sensor that can not only support environmental temperature detection but also

monitor whether the operating temperature of the device is within a reasonable range

- 100% anonymity and GDPR-compliant without image capturing, free from privacy concerns
- Type-C version (wired) and battery version (wireless) available for different installation environments
- Ultra-low power consumption with up to 1.6-year battery life, complies with ESG standard
- Wireless connectivity and convenient size improve the accessibility and simplicity of deployment
- Store locally historical records and support retransmission to prevent data loss
- Support Milesight D2D protocol to enable ultra-low latency and direct control without gateways
- Equipped with NFC for one touch configuration
- Function well with standard LoRaWAN® gateways and network servers
- Compatible with Milesight IoT Cloud and Milesight Development Platform

## ◆ Specifications

| **Measurement** | |
|---|---|
| **People Counting** | |
| Technology | Radar (Battery Version Only) & Thermopile |
| Installation Height | 2.5 m ~ 3.0 m<br>(Place the device 70-120 cm away from the target. The target height may be based on the average height of the intended audience) |
| Detection Range | 5.55 m x 2.30 m @ 3 m Installation Height |
| Sensor Adjustable Angle | 0°~90° |
| Detection Rate[1] | Up to 95% (Single Person[2]: Up to 99%) |
| Best Operating Temperature | 15 °C ~ 30 °C |
| Advanced Features | U-Turn Filtering, Bi-directional People Counting, Side by Side Differentiation |
| **Temperature** | |
| Range | -30°C ~ 70°C |
| Accuracy | ± 2°C |
| **Wireless Transmission** | |
| Protocol | LoRaWAN®, Milesight D2D |
| Antenna | Internal Antenna |
| Frequency | CN470/IN865/RU864/EU868/US915/AU915/KR920/AS923-1&2&3&4 |
| Tx Power | 16 dBm (868 MHz) / 19 dBm (470 MHz) / 22 dBm (915 MHz) |
| Sensitivity | -137dBm |
| Mode | OTAA/ABP Class A |

| | |
|---|---|
| **Others** | |
| Button | 1 × Reset Button (Internal) |
| **Software** | |
| Configuration | NFC via Mobile App, Downlink |
| Advanced Feature | Data Storage (1,000 entries), Data Retransmission, Data Retrievability, Milesight D2D Controller |
| **Physical Characteristics** | |
| Power Supply | 1. 5V/1A by Type-C Port (Both Versions)<br>2. 4 x 9000 mAh ER26500 Li-$SOCl_2$ Replaceable Batteries (Battery Version Only) |
| Battery Life[3] | Around 1.7 Years (SF7, EU868&US915)<br>Around 1.6 Years (SF10, EU868&US915)<br>(30-min Interval, 25°C, 1000 People per Day ) |
| Operating Temperature | -20°C ~ 60°C |
| Relative Humidity | 0% ~ 95% (Non-condensing) |
| Ingress Protection | IP30 |
| Dimension | Type-C Version: 70 x 68 x 32 mm ( 2.76 x 2.68 x 1.26 in)<br>Battery Version: 188 x 68 x 32 mm ( 7.40 x 2.68 x 1.26 in) |
| Material & Color | PC (Flame Retardant), White |
| Weight | Type-C Version: 72.3g<br>Battery Version: 383g |
| Installation | Ceiling Mounting, Lintel Mounting |
| **Approvals** | |
| Regulatory | CE, FCC |

[1] Tested under an installation height of 2.7m, with an average height of target of 1.7m and a temperature of 25°C.

[2] A distance of 30 ~ 40 cm should be maintained between two people while passing through the detection area.

[3] Tested under laboratory conditions and for guideline purposes only.

## ◆ Detection Area

| Installation Height (m) | Detection Area(m) |
|---|---|
| 2.5 | 4.35 × 1.85 |
| 2.7 | 4.55 × 2.10 |
| 3.0 | 5.55 × 2.30 |

## ◆ Dimensions (mm)

**Type-C Version：**

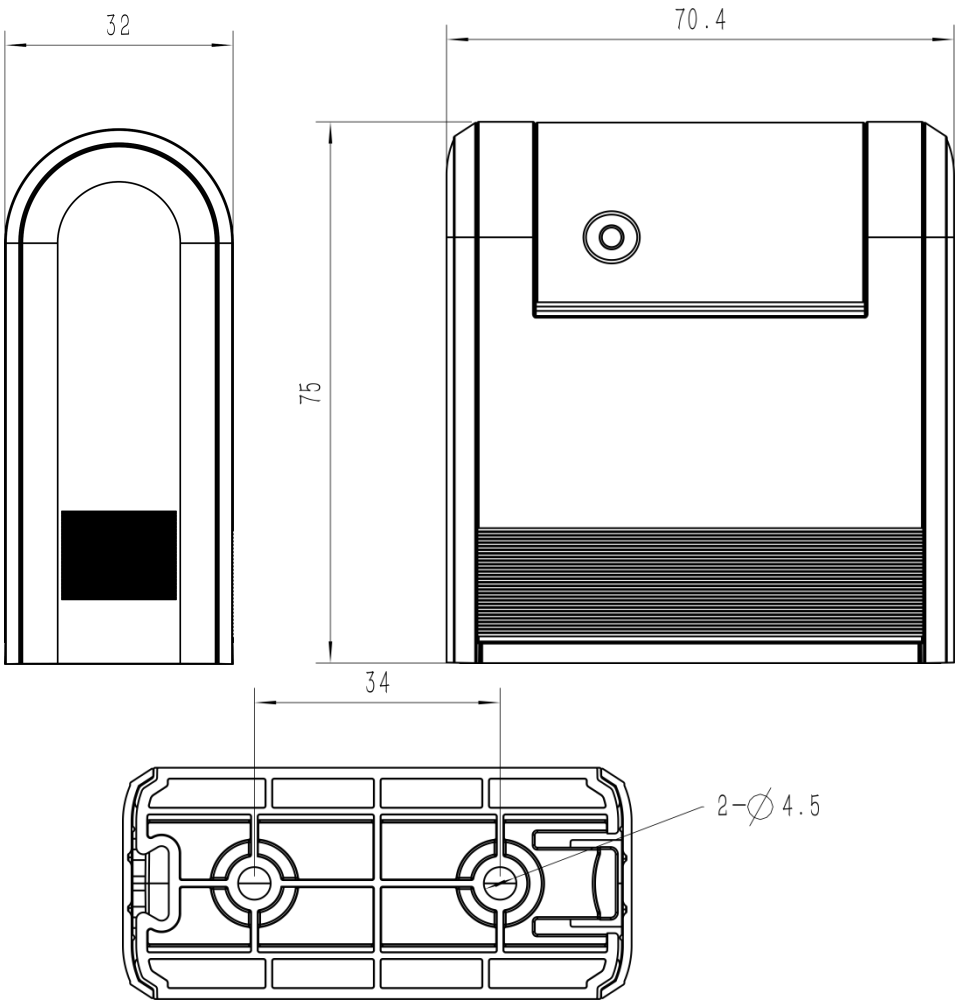


**Battery Version :**

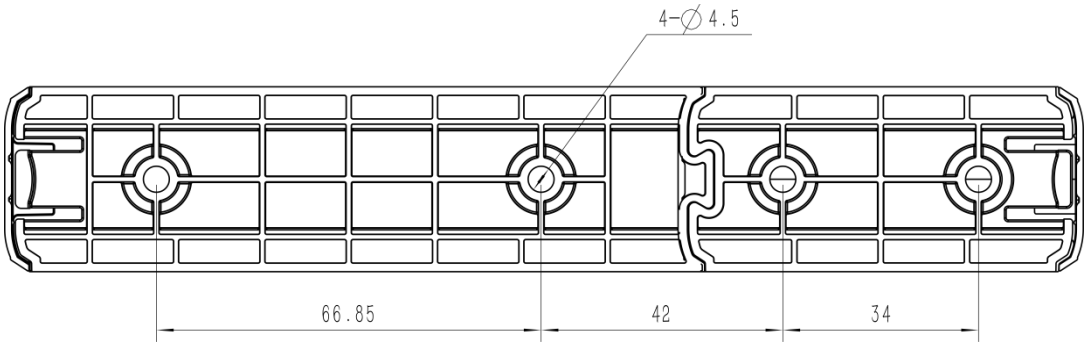

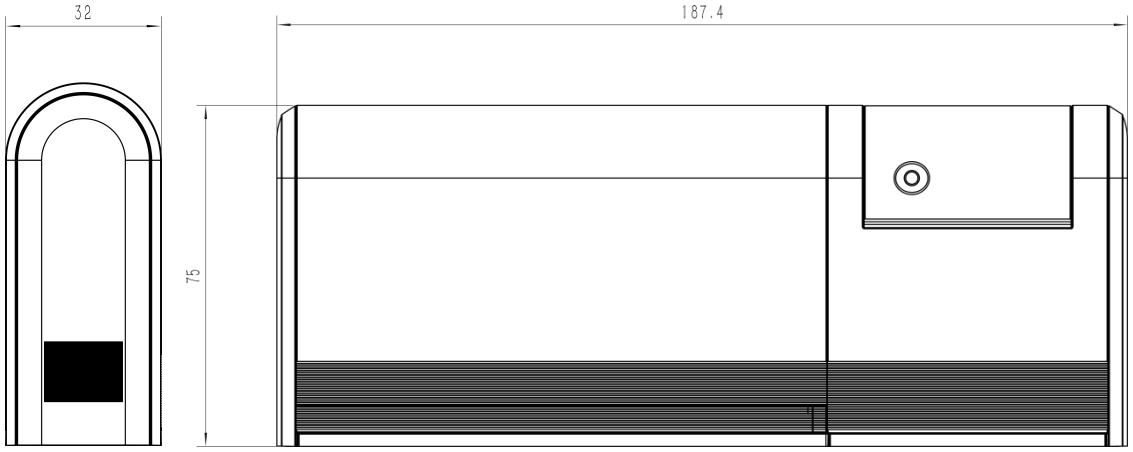


WELKO Av. Providencia 2330, Of. 63
+56 9 3174 3870 / +56 9 3427 0017
ventas@welko.cl - www.welko.cl